NATIONAL
PIPE HANGER CORPORATION

CORPORATE HEADQUARTERS - 200 CAMPUS DR, MOUNT HOLLY, NJ 08060 TEL: (609) 261-5353 FAX: (609) 261-3249
MD OFFICE - 15850 COMMERCE CT, SUITE P, UPPER MARLBORO, MD 20774 TEL: (301) 568-8805 FAX: (301) 967-1456
E-MAIL: SALES@NATIONALPIPEHANGER.COM WEBSITE: WWW.NATIONALPIPEHANGER.COM

FIG. NS10 **FIG. NS20** **FIG. NS50** **FIG. NS60**

Pre-Insulated Sliding Pipe Support Installation Instructions

The following installation instructions are for Pre-Insulated Sliding Pipe Supports NS10, NS20, NS50, and NS60.

1. Components

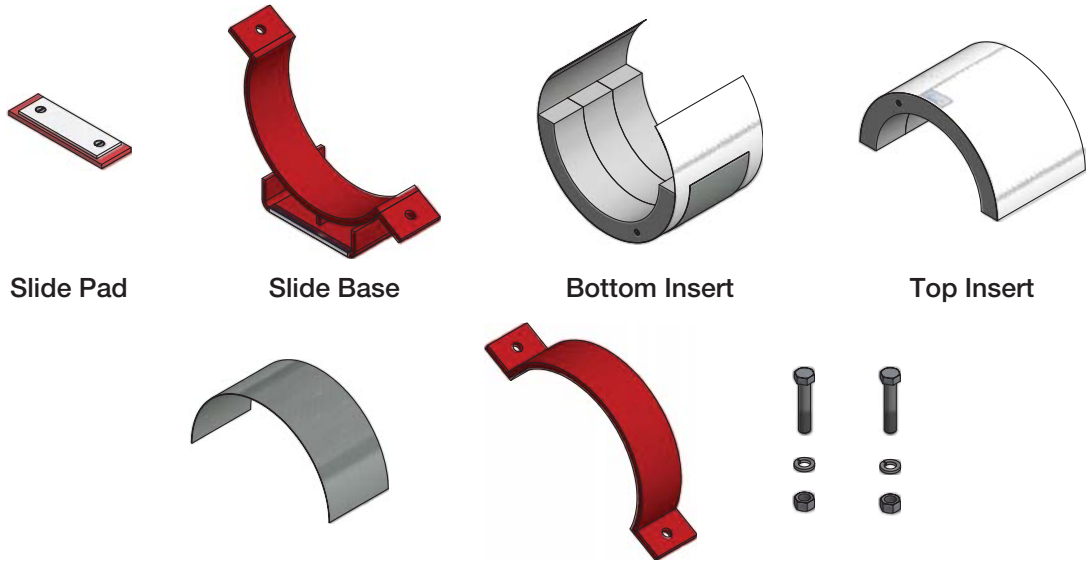

Slide Pad Slide Base Bottom Insert Top Insert

Top Shield Top Clamp Hardware

The instructions that follow assume a Neutral Position installation. See section Cold Offset in Axial and Lateral Directions (Page 6) for definitions and alternative installation configurations.

2. Locate Slide Pad

Place the Slide Pad on the structural support member and align it under the centerline of the pipe in the lateral direction. Locate the Slide Pad on the structural support member along the axial direction of the pipe (shown on member centerline). Mark the perimeter of Slide Pad on structural support member for weld preparation.

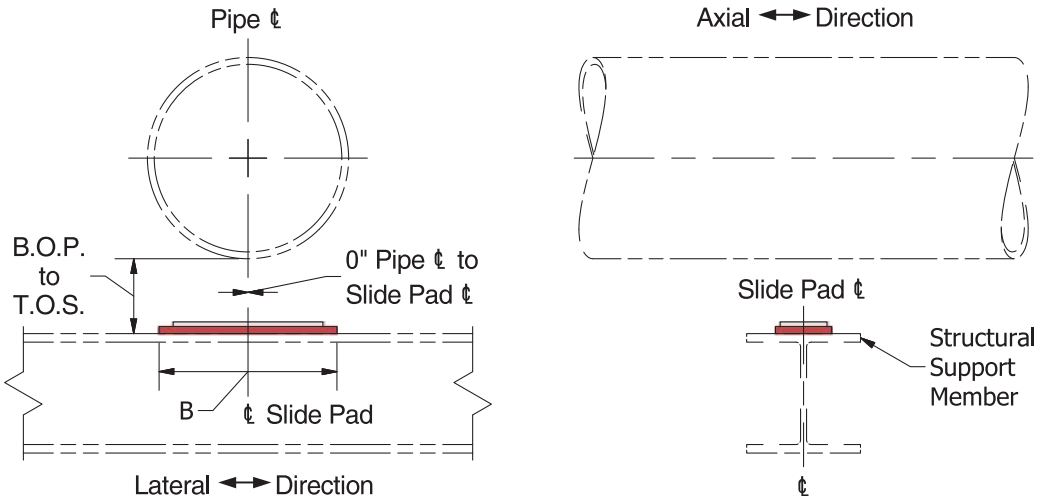

October 24, 2018

NATIONAL
PIPE HANGER CORPORATION

CORPORATE HEADQUARTERS - 200 CAMPUS DR, MOUNT HOLLY, NJ 08060 TEL: (609) 261-5353 FAX: (609) 261-3249
MD OFFICE - 15850 COMMERCE CT, SUITE P, UPPER MARLBORO, MD 20774 TEL: (301) 568-8805 FAX: (301) 967-1456
E-MAIL: SALES@NATIONALPIPEHANGER.COM WEBSITE: WWW.NATIONALPIPEHANGER.COM

3. Weld Slide Pad to Structural Support Member

The Slide Pad may be welded to the structural support member in an intermittent pattern or an all-around pattern. All-around weld patterns seal the faying surfaces from the environment. Intermittent weld patterns may be used where corrosion is not a concern.

3a. Disassemble the Slide Pad by unscrewing the polyethylene strip from the backing bar.

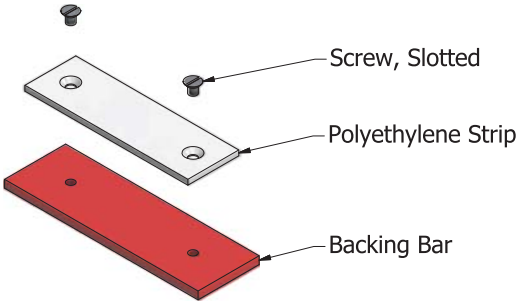

3b. Grind structural support member and backing bar finish to bare metal in the intermittent or all-around pattern. See Table 1 for Intermittent Fillet Weld Pattern Details.

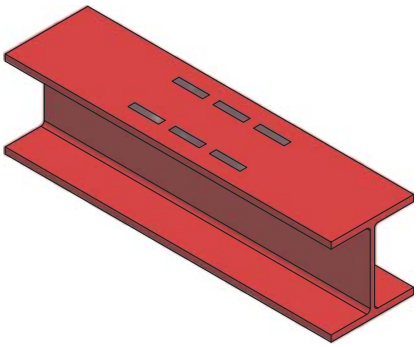

Intermittent Pattern

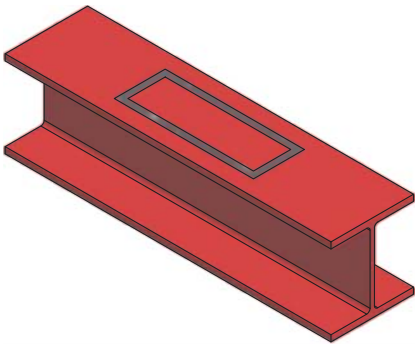

All-Around Pattern

3c. Weld backing bar to structural support member. See Table 1 for weld pitch, P.

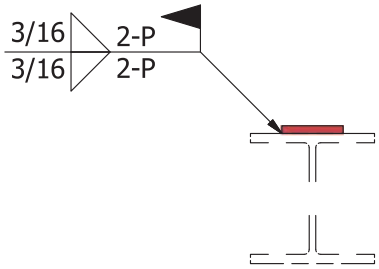

Intermittent Pattern

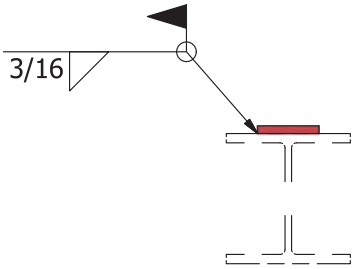

All-Around Pattern

3d. Allow backing bar to cool. Remove weld spatter. Reassemble the Slide Pad by fastening the polyethylene strip to the backing bar. Post-weld repair prepared areas by painting or applying cold galvanizing per ASTM A-780.

NATIONAL
PIPE HANGER CORPORATION

CORPORATE HEADQUARTERS - 200 CAMPUS DR, MOUNT HOLLY, NJ 08060 TEL: (609) 261-5353 FAX: (609) 261-3249
MD OFFICE - 15850 COMMERCE CT, SUITE P, UPPER MARLBORO, MD 20774 TEL: (301) 568-8805 FAX: (301) 967-1456
E-MAIL: SALES@NATIONALPIPEHANGER.COM WEBSITE: WWW.NATIONALPIPEHANGER.COM

4. Place Slide Base and Bottom Insert

Place the Slide Base on top of the Slide Pad. Align the Slide Base centerline with the Slide Pad centerline in both the lateral and axial directions. Place the Bottom Insert on the top of the pipe and rotate into position until the ends of the segment are parallel to the horizontal plane. Take care not to damage the vapor barrier sealing flaps.

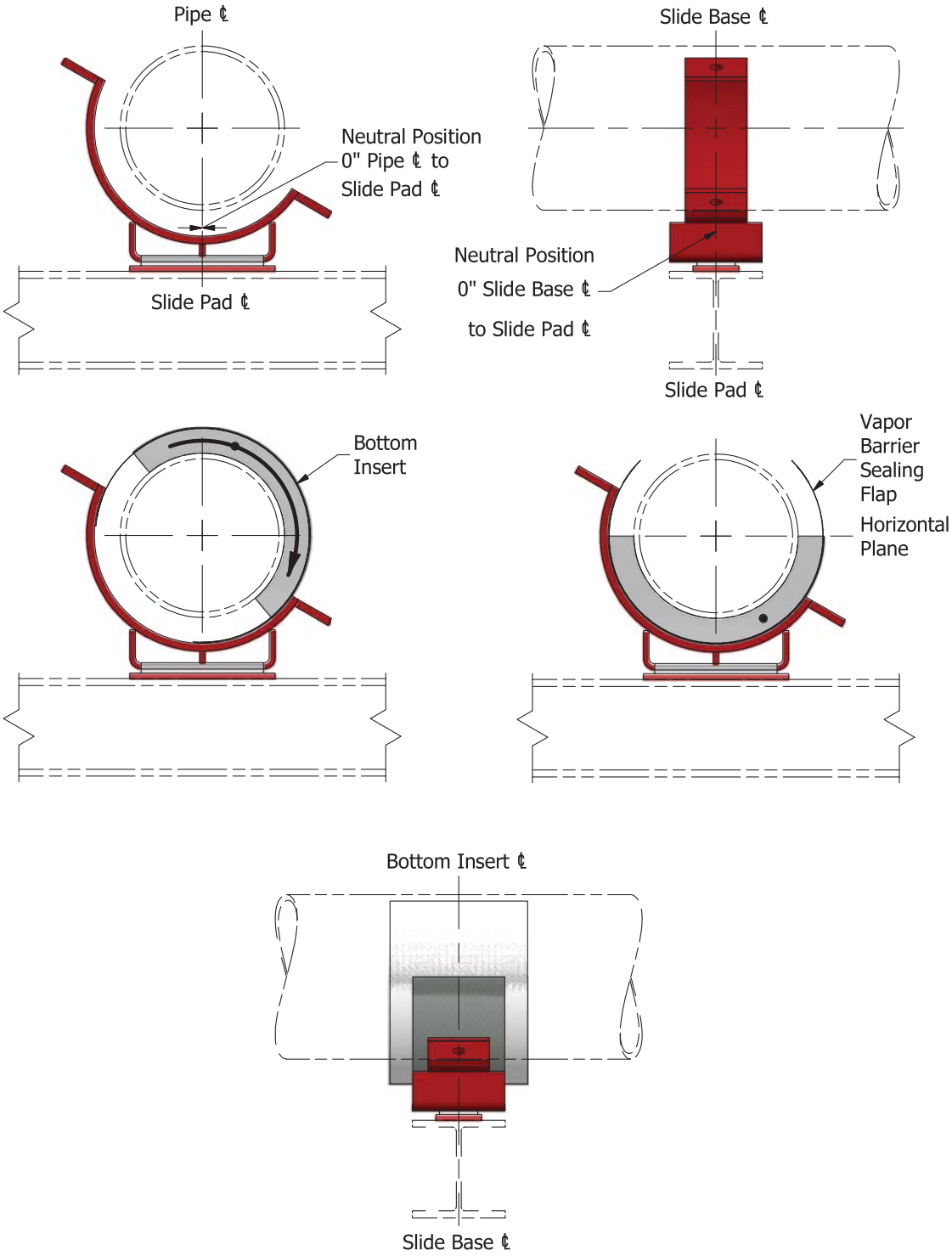

NATIONAL
PIPE HANGER CORPORATION

CORPORATE HEADQUARTERS - 200 CAMPUS DR, MOUNT HOLLY, NJ 08060 TEL: (609) 261-5353 FAX: (609) 261-3249
MD OFFICE - 15850 COMMERCE CT, SUITE P, UPPER MARLBORO, MD 20774 TEL: (301) 568-8805 FAX: (301) 967-1456
E-MAIL: SALES@NATIONALPIPEHANGER.COM WEBSITE: WWW.NATIONALPIPEHANGER.COM

5. Place Top Insert, Top Shield, and Top Clamp

Pull the vapor barrier sealing flaps on the Bottom Insert away from the pipe. Slide the Top Insert along the axis of the pipe and over the Bottom Insert, aligning them end-to-end. Remove the sealing tape backing on each vapor barrier sealing flap and adhere them to the Top Insert vapor barrier. Slide the Top Shield over the Top Insert aligning it end-to-end and lip-to-lip with the Bottom Shield. Take care not to tear the vapor barriers with the edges of the Top Shield. Place the Top Clamp over the Top Insert and Top Shield. Insert the bolts through the Top and Bottom Clamp ears and hand tighten. Incrementally and alternately tighten the bolts while maintaining an even gap on each side. See Table 2 for Clamp Bolt Torque.

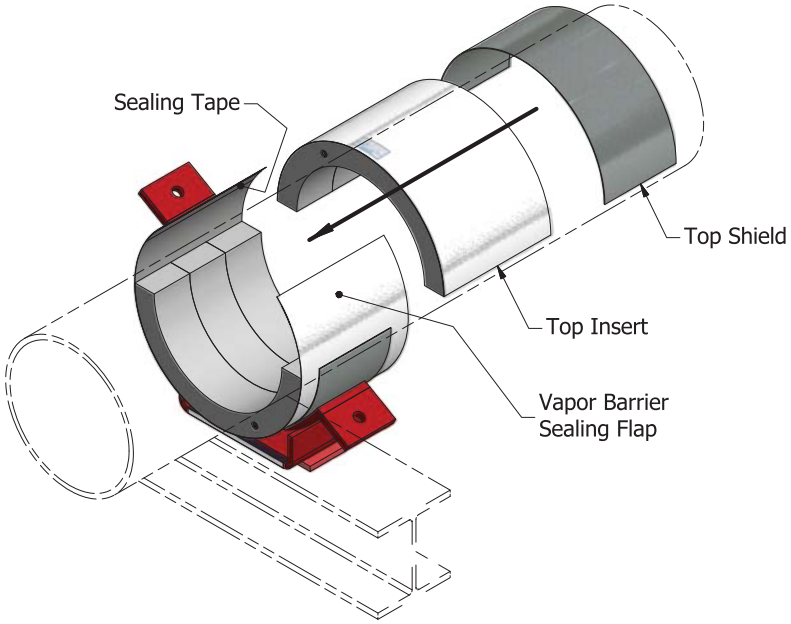

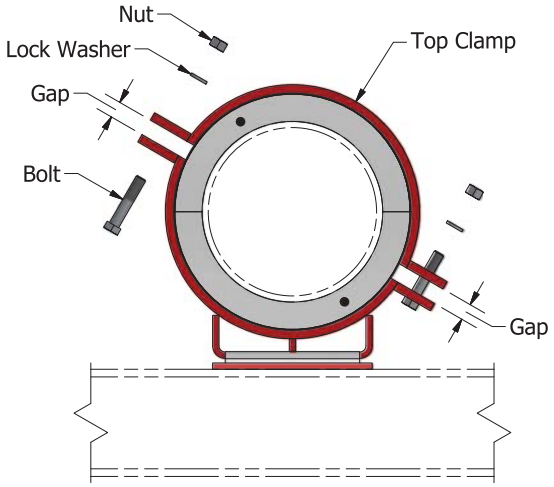

6. Attach to Adjoining Insulation

Abut the adjoining insulation against the surface of the Top and Bottom Insert. Seal around the circumference of the joint between the Top and Bottom Insert and the adjoining insulation with lap tape.

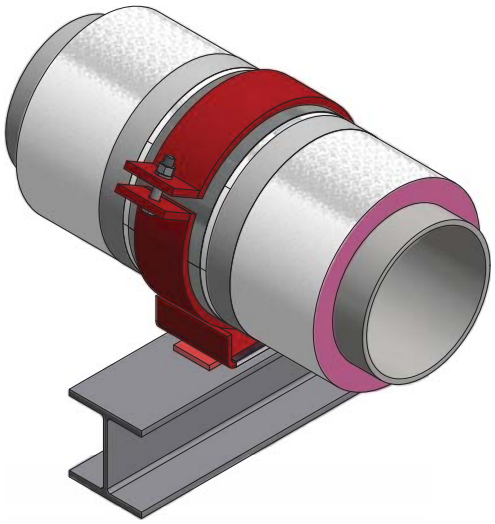

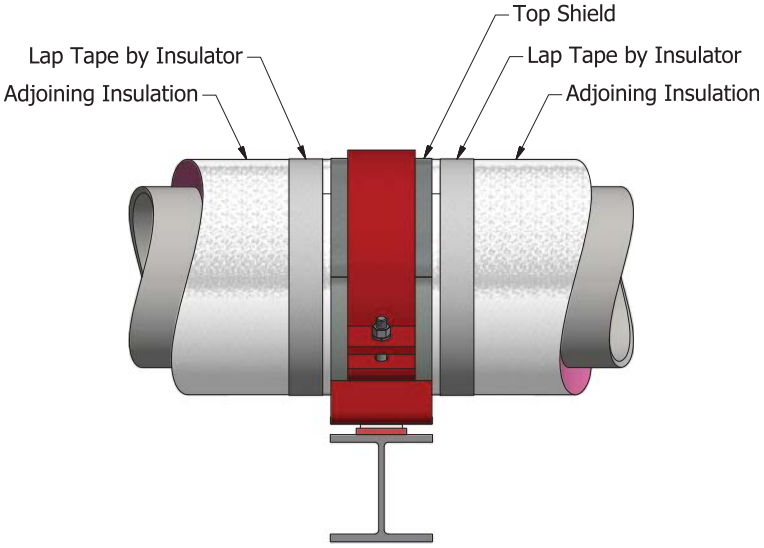

NPHC

NATIONAL
PIPE HANGER CORPORATION

CORPORATE HEADQUARTERS - 200 CAMPUS DR, MOUNT HOLLY, NJ 08060 TEL: (609) 261-5353 FAX: (609) 261-3249
MD OFFICE - 15850 COMMERCE CT, SUITE P, UPPER MARLBORO, MD 20774 TEL: (301) 568-8805 FAX: (301) 967-1456
E-MAIL: SALES@NATIONALPIPEHANGER.COM WEBSITE: WWW.NATIONALPIPEHANGER.COM

Table 1. Intermittent Fillet Weld Pattern Details

PIPE SIZE	INS THK = 1"				INS THK = 1½"				INS THK = 2"				INS THK = 2½"				INS THK = 3"				INS THK = 4"			
	B	P	n	E	B	P	n	E	B	P	n	E	B	P	n	E	B	P	n	E	B	P	n	E
2"	2.5	N/A	1	1.25	3	N/A	1	1.5	4	N/A	1	2	4.5	N/A	1	2.25	5.5	3	2	1.25	7.5	4	2	1.75
2½"	2.5	N/A	1	1.25	4	N/A	1	2	4.5	N/A	1	2.25	5.5	N/A	1	2.75	6.5	4	2	1.25	8	4	2	2
3"	3	N/A	1	1.5	4	N/A	1	2	4.5	N/A	1	2.25	5.5	3	2	1.25	6.5	4	2	1.25	8	4	2	2
4"	4	N/A	1	2	4.5	N/A	1	2.25	5.5	3	2	1.25	6.5	4	2	1.25	7.5	4	2	1.75	9	5	2	2
5"	4.5	N/A	1	2.25	5.5	3	2	1.25	6.5	4	2	1.25	7.5	4	2	1.75	8	4	2	2	9.5	3	3	1.75
6"	5.5	3	2	1.25	6.5	4	2	1.25	7.5	4	2	1.75	8	4	2	2	9	5	2	2	10.5	4	3	1.25
8"	7.5	4	2	1.75	8	4	2	2	9	5	2	2	9.5	3	3	1.75	10.5	4	3	1.25	12	4	3	2
10"	9	5	2	2	9.5	3	3	1.75	10.5	4	3	1.25	11	4	3	1.5	12	4	3	2	13	5	3	1.5
12"	10.5	4	3	1.25	11	4	3	1.5	12	4	3	2	12.5	5	3	1.25	13	5	3	1.5	14.5	4	4	1.25
14"	11	4	3	1.5	12	4	3	2	12.5	5	3	1.25	13	5	3	1.5	14	4	4	1	15.5	4	4	1.75
16"	12.5	5	3	1.25	13	5	3	1.5	14	5	3	2	14.5	4	4	1.25	15.5	4	4	1.75	16.5	4	4	2.25
18"	14	5	3	2	14.5	4	4	1.25	15.5	4	4	1.75	16	4	4	2	16.5	4	4	2.25	18	5	4	1.5
20"	15.5	4	4	1.75	16	4	4	2	16.5	4	4	2.25	17.5	5	4	1.25	18	5	4	1.5	19.5	5	4	2.25
24"	18	5	4	1.5	19	5	4	2	19.5	5	4	2.25	20.5	4	5	2.25	21	4	5	2.5	22.5	5	5	1.25
30"	22.5	5	5	1.25	23	5	5	1.5	24	5	5	2	24.5	5	5	2.25	25	5	5	2.5	26.5	6	5	1.25
36"	26.5	6	5	1.25	27.5	6	5	1.75	28	6	5	2	28.5	6	5	2.25	29.5	6	5	2.75	31	6	5	3.5
42"	31	6	5	3.5	31.5	6	5	3.75	32.5	6	6	1.25	33	6	6	1.5	33.5	6	6	1.75	35	6	6	2.5

Notes:
1. Minimum intermittent fillet weld size = 3/16".
2. Intermittent fillet weld length = 2".
3. Minimum fillet weld size for all-around weld pattern = 3/16".

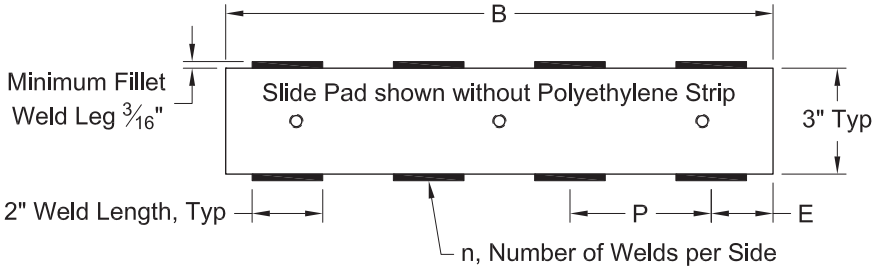

Table 2. Clamp Bolt Torque

PIPE SIZE	BOLT SIZE	TORQUE ft*lbf
2"	3/8 - 16 UNC	5 - 10
2½"	3/8 - 16 UNC	5 - 10
3"	3/8 - 16 UNC	5 - 10
4"	3/8 - 16 UNC	5 - 10
5"	1/2 - 13 UNC	20 - 25
6"	1/2 - 13 UNC	20 - 25
8"	1/2 - 13 UNC	20 - 25
10"	5/8 - 11 UNC	35 - 40
12"	5/8 - 11 UNC	35 - 40
14"	5/8 - 11 UNC	35 - 40
16"	3/4 - 10 UNC	65 - 75
18"	3/4 - 10 UNC	65 - 75
20"	3/4 - 10 UNC	65 - 75
24"	3/4 - 10 UNC	65 - 75
30"	7/8 - 9 UNC	110 - 120
36"	1 1/8 - 7 UNC	180 - 200
42"	1 1/8 - 7 UNC	180 - 200

NATIONAL
PIPE HANGER CORPORATION

CORPORATE HEADQUARTERS - 200 CAMPUS DR, MOUNT HOLLY, NJ 08060 TEL: (609) 261-5353 FAX: (609) 261-3249
MD OFFICE - 15850 COMMERCE CT, SUITE P, UPPER MARLBORO, MD 20774 TEL: (301) 568-8805 FAX: (301) 967-1456
E-MAIL: SALES@NATIONALPIPEHANGER.COM WEBSITE: WWW.NATIONALPIPEHANGER.COM

Cold Offset in Axial and Lateral Directions

Axial Cold Offset is demonstrated with a NS20. Lateral Cold Offset is demonstrated with a NS50. Cold Offsets are generally prescribed as part of the design process of the piping system. Cold Offset directions (+ / -) are generally oriented relative to site or plant cardinal directions.

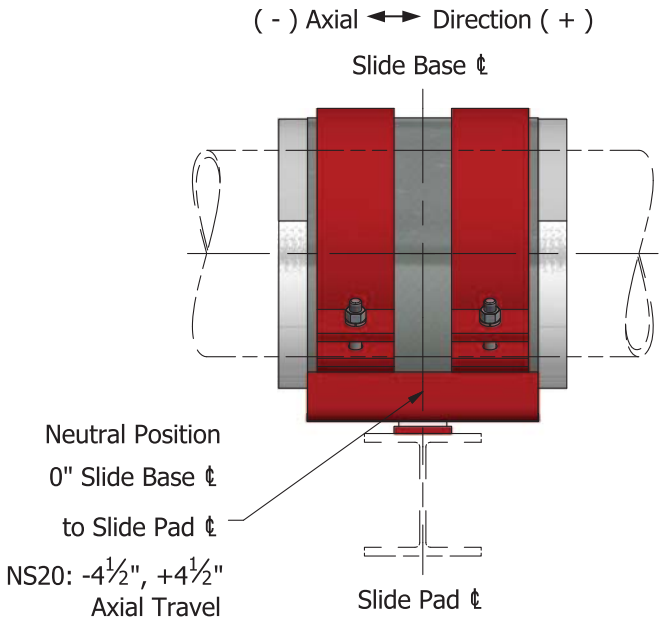

Neutral Position

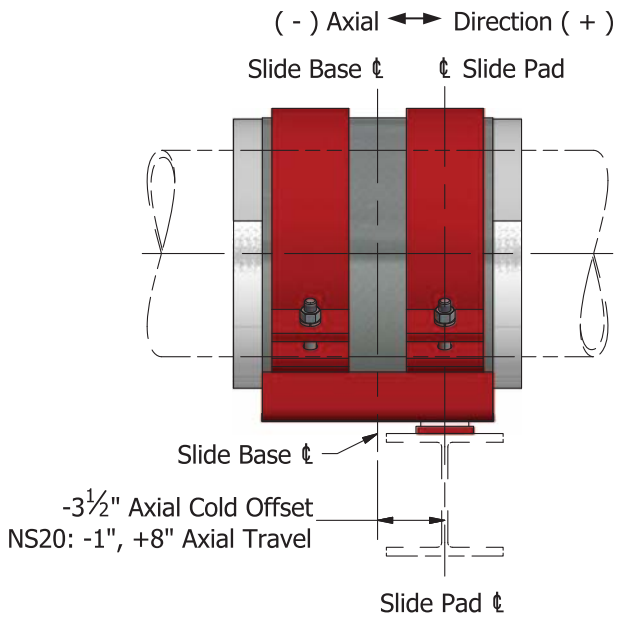

Axial Cold Offset
Example: -3 1/2" Offset

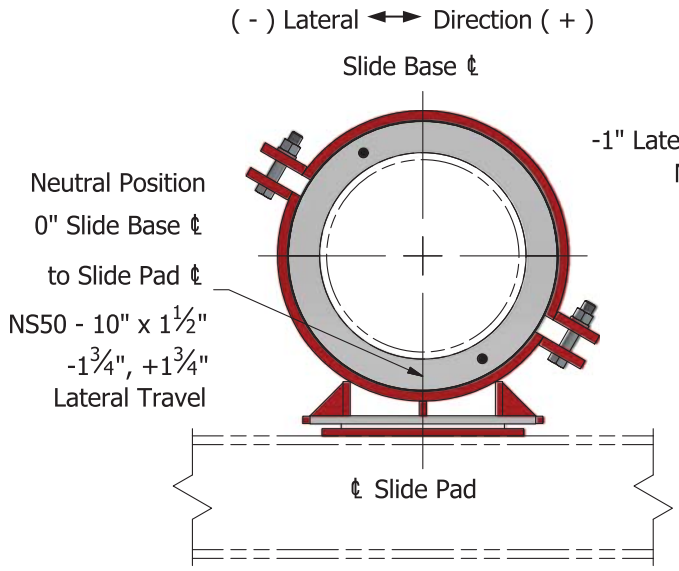

Neutral Position

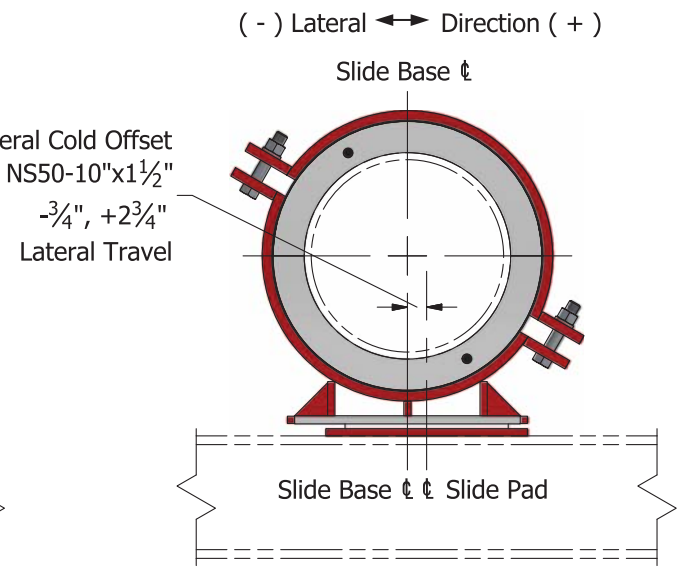

Lateral Cold Offset
Example: -1" Offset